Do228 NXT
MISSION EQUIPMENT

Versatile sensor and equipment options tailored to your mission needs

STOL Certified
362 m landing distance

Cruise Speed
240 KTAS

High Endurance
over 8 hours

Flight Range
up to 1,635 NM

PAX Capacity
up to 19 passengers

Payload
typically 2,155 kg

GENERAL ATOMICS AEROTEC

Do228 NXT | MISSION EQUIPMENT

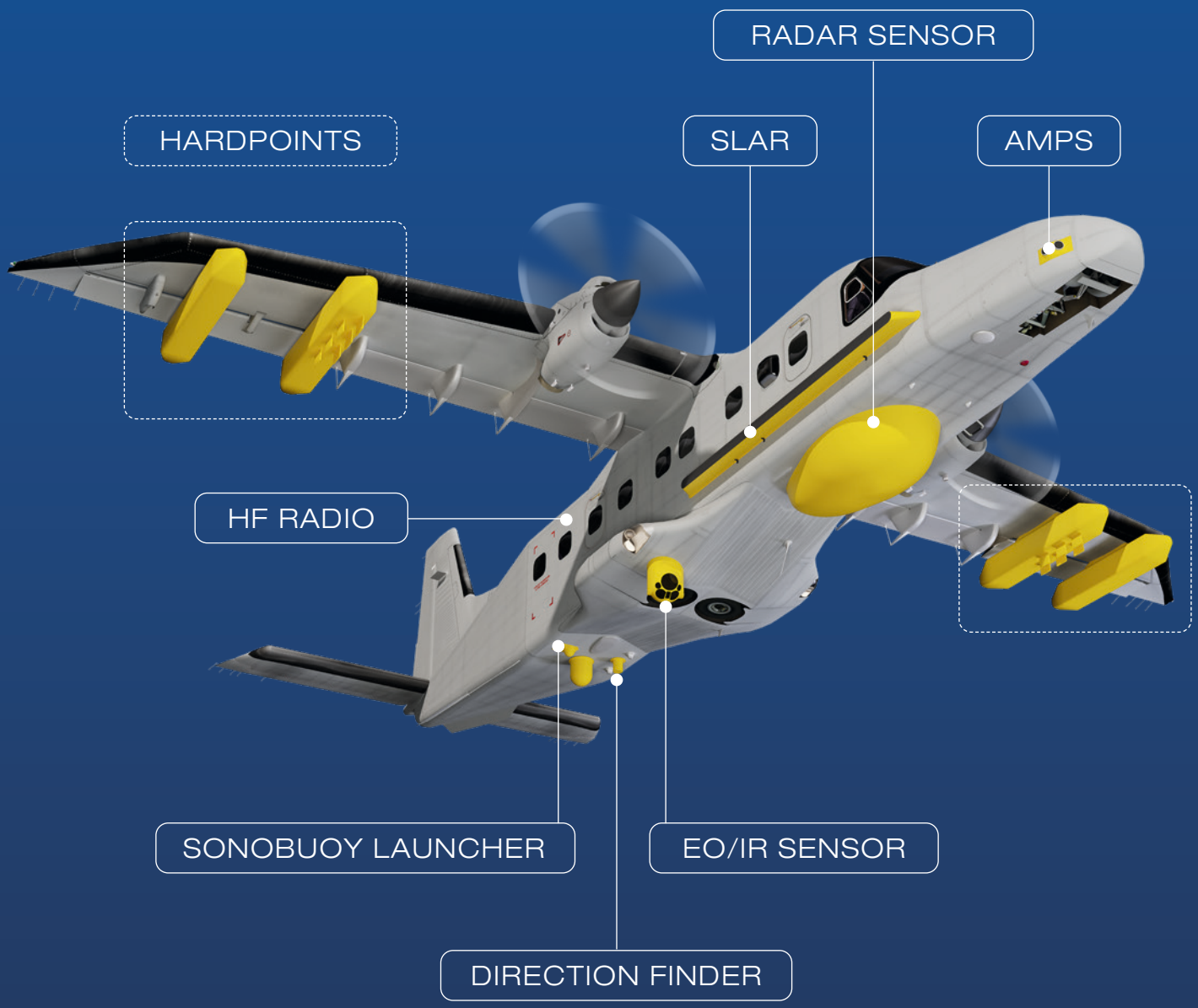

CUSTOM INSTALLATION OF SENSORS AND EQUIPMENT

The Do228 NXT has proven itself to be the ideal platform for integrating various sensor systems and mission equipment. This enables the aircraft to fulfill a wide range of mission requirements. Our decades of experience guarantee the best selection and integration of mission systems. Numerous sensor systems and mission equipment from several major manufacturers have been successfully implemented, if it is a 360° radar system, optical systems, central intelligence or communication systems — the possibilities are virtually endless. Four hardpoints under the wing allow to carry additional payloads or equipment.

Do228 NXT | MISSION CONFIGURATION

MARITIME PATROL

Protecting what matters beyond the coastline

- Anti-submarine capability
- Electronic support measures (ESM)
- Magnetic anomaly detector (MAD)
- Sonobuoy launch capability
- Long-range coastal patrol

CENTRAL INTELLIGENCE

Emphasizes persistent surveillance and situational awareness

- SIGINT / ELINT / COMINT capability
- Full-spectrum intelligence suite
- Persistent ISR capability
- Tactical sensor integration
- BLOS / LOS downlink & network capability

MARITIME SURVEILLANCE

Eyes over the ocean, state of the art maritime surveillance

- Maritime surveillance suite
- Search & rescue excellence
- Anti-smuggling operations
- Persistent coastal intelligence
- Protection and environmental monitoring

DISASTER RESPONSE

Discover, monitor and protect, disaster management and wildfire detection

- Disaster response platform
- Emergency communications hub
- Multi-sensor intelligence
- Real-time awareness
- All-weather, all-terrain operations

Do228 NXT | AIRCRAFT DATA

PERFORMANCE

Takeoff distance to 35 ft [1]	2,606 ft	794 m
Landing distance from 50 ft [2]	1,473 ft	449 m
STOL takeoff distance to 50 ft [3]	1,460 ft	445 m
STOL landing distance from 30 ft [4]	1,189 ft	362 m
Max. cruise speed	240 KTAS at ISA, 10,000 ft	

Max. useful load		5,952 lb	2,700 kg
Max. range (max. fuel + typical payload 645 kg) [5]		1,323 NM	2,450 km
Max. range @ max. payload [5]		160 NM	296 km
Max. operating altitude		25,000 ft	7,620 m
Max. TOW (takeoff weight)	(standard)	14,110 lb	6,400 kg
	(optional civil)	14,495 lb	6,575 kg
	(optional military)	14,550 lb	6,600 kg

DIMENSIONS

Height	15 ft 11 in	4.86 m
Length	54 ft 4 in	16.56 m
Wingspan	55 ft 8 in	16.97 m

ENGINES

Manufacturer	Honeywell
Model	2x TPE331-10 engine with MTV-27 propellers
Power output	579 kW (776 SHP) each (flat) rated power

[1] MTOW (14,110 lb), ISA, Sea Level, Paved Dry Runway, 0 kts Wind, 0 % Slope, Flaps 1, Engine Failure at V_1 | [2] MLW (13,448 lb), ISA, Sea Level, Paved Dry Runway, 0 kts Wind, 0 % Slope, Flaps DN, Unfactorized Data | [3] MTOW STOL (12,570 lb), ISA, Sea Level, Paved Dry Runway, 0 kts Wind, 0 % Slope, Flaps 2, Unfactorized Data | [4] MLW STOL (12,570 lb), ISA, Sea Level, Paved Dry Runway, 0 kts Wind, 0 % Slope, Flaps DN, Unfactorized Data | [5] MTOW (14,110 lb), ISA, FL100, 0 kts Wind, Best Range Speed, Cargo Layout incl. 2 Pilots each 187 lb, NBAA IFR Reserves (100 NM alternate)

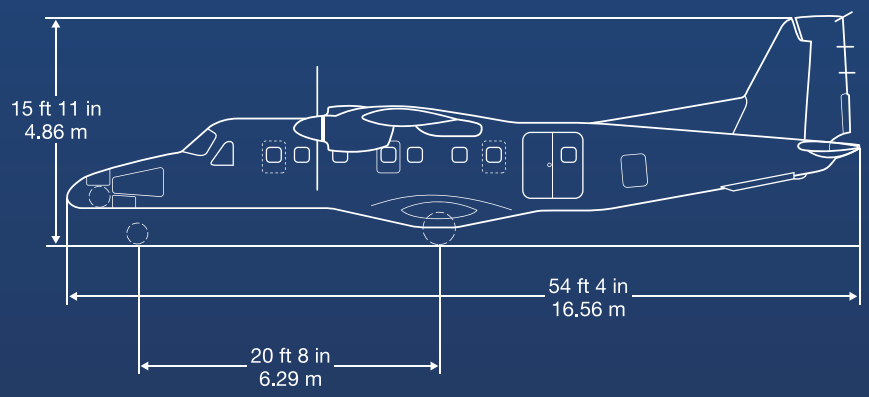

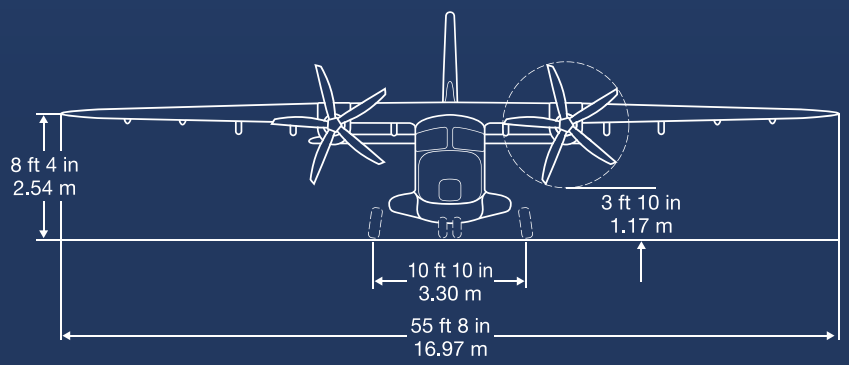

GENERAL ATOMICS AEROTEC

General Atomics AeroTec Systems GmbH
Galileostraße 396 | 82131 Gauting | Germany
ga-ats.com | info@ga-ats.com | +49 8153 30 2244

© 2026 General Atomics AeroTec Systems GmbH | Version 01.26
All rights reserved. | All information in this document is provided for informational purposes only and is not legally binding. Technical data, in particular, is subject to change, may contain inaccuracies and is not intended or warranted for operational use.